1. REPORT OF THE TOMINGLEY ADVANCEMENT ASSOCIATION COMMITTEE

The report to and minutes of the Tomingley Advancement Association Committee Meeting held on 18 December 2023 at the Tomingley Memorial Hall are attached (***See Attachment No. 1***).

RECOMMENDATION

That the report of the Tomingley Advancement Association Committee and the recommendations from the minutes of the Meeting held on 18 December 2023 be adopted.

---

2. REPORT OF THE AUDIT RISK AND IMPROVEMENT COMMITTEE

The minutes of the Audit Risk and Improvement Committee Meeting held on 10 November 2023 in the Narromine Shire Council Chambers are attached (***See Attachment No. 2***).

RECOMMENDATION

That the recommendations from the minutes of the Audit Risk and Improvement Committee Meeting held on 10 November 2023 be adopted.

---

3. REPORT OF THE LOCAL TRAFFIC COMMITTEE

The report to and minutes of the Local Traffic Committee Meeting held on 4 December 2023 are attached (***See Attachment No. 3***).

RECOMMENDATION

That the report of the Local Traffic Committee and the recommendations from the minutes of the Meeting held on 4 December 2023 be adopted.

---

4. REPORT OF THE NARROMINE AUSTRALIA DAY COMMITTEE

The minutes of the Narromine Australia Day Committee Meeting held on 17 January 2024 at the Narromine Shire Council Chambers are attached (***See Attachment No. 4***).

RECOMMENDATION

That the recommendations from the minutes of the Narromine Australia Day Committee Meeting held on 17 January 2024 be adopted.

MINUTES OF THE TOMINGLEY ADVANCEMENT ASSOCIATION COMMITTEE MEETING HELD ON MONDAY, 18 DECEMBER 2023 AT TOMINGLEY MEMORIAL HALL

PRESENT: Craig Davies (Mayor), Cr Les Lambert (Chair), Cr Dawn Collins (Narromine Shire Council), Cr Ewen Jones (Narromine Shire Council), Jane Redden (General Manager), Phil Johnston (Director, Community and Economic Development), Mel Slimming (Director Infrastructure and Engineering Services), Linda Buntrock, Tony Ellis, Barry Unger, Christine Unger, Sandy Strahorn, Andy Strahorn, Rodney Smith, Cheryl Smith, Doreen Dart, Max McNiven, Anne McNiven, Lyn Davies, Dave Pritchard (Tomingley Gold Operations), Robert Collins, and Alison Attwater (Minute Secretary).

1. WELCOME

The Chair welcomed those present and declared the meeting open at 6.00 pm.

2. APOLOGIES

RECOMMENDED Barry Unger/Tony Ellis that the apologies of Cr Casey Forrester, Elaine Buckley and Gavin Dart be accepted.

3. DECLARATION/CONFLICTS OF INTEREST

Nil

4. CONFIRMATION OF MINUTES

RECOMMENDED Tony Ellis/Doreen Dart that the Minutes from the meeting held on 22 May 2023 be adopted as a true and accurate record of the meeting.

5. BUSINESS ARISING FROM THE MINUTES

Nil

6. REPORT TO TOMINGLEY ADVANCEMENT ASSOCIATION COMMITTEE

1) Follow-up items

- An estimated completion time was requested regarding the completion of the drainage in Burill Street. Council advised that Burill Street is a high priority for early in 2024.

RECOMMENDED Linda Buntrock/Doreen Dart that the information be noted.

2) WHS

Nil

3) Bookings

Nil

REPORT TO TOMINGLEY ADVANCEMENT ASSOCIATION COMMITTEE Cont'd.

4) Financial Report

It was asked if the TAAC finances received interest. Council advised that they do not.

RECOMMENDED Christine Unger/Doreen Dart that the information be noted.

7. GENERAL BUSINESS

- Dave Pritchard from Tomingley Gold Operations gave an update on the highway upgrade and stated that Transport NSW had approved this project.
- Council provided an update on the incomplete service station, advising that work on completion will continue in 2024.
- Council was commended on road upgrades.
- It was requested that Cemetery Road be inspected.

Action: Council to inspect Cemetery Road

- It was advised that the vacant block in Myall Street is overgrown and is a fire hazard.

Action: CRM will be lodged regarding the overgrown block.

8) NEXT MEETING

The next meeting of the Tomingley Advancement Association Committee will be held on Monday, 13th May 2024 at the Tomingley Memorial Hall, commencing at 6.00pm.

There being no further business, the meeting closed at 6.24 pm.

The Minutes (pages 1 – 2) were confirmed at the meeting held on the day of 2024, and are a true and accurate record of proceedings of the meeting held on 18 December 2023.

CHAIR

REPORT TO TOMINGLEY ADVANCEMENT ASSOCIATION COMMITTEE MEETING TO BE HELD AT TOMINGLEY MEMORIAL HALL ON MONDAY 18 DECEMBER 2023 AT 6PM

1. FOLLOW-UP UP ITEMS

ITEM		ACTION/STATUS
Future funding streams availability for practise wall		**Action:** Council will investigate future funding streams to fund the practice wall. **Outcome:** An appropriate funding opportunity has not yet been released.
Monument Ideas		**Action:** Committee to submit monument ideas to Council **Outcome:** Nothing yet received.
Cement residue build-up at the truck stop		**Action:** Council to investigate **Outcome:** This issue is now resolved
Drainage in Burril Street		**Action:** Council to investigate drainage on Burril Street **Outcome:** This area has been surveyed, and a drainage plan is currently being complied
McNiven's Lane water pooling		**Action:** Council to investigate the pooling water at the end of McNiven's lane **Outcome**: This area is on the insurance storm damage list and will be addressed

RECOMMENDATION

That the information be noted.

2. WORK HEALTH AND SAFETY ISSUES

Have any other Work Health and Safety Issues arisen for further consideration.

Nil

RECOMMENDATION

That the information be noted.

3. BOOKINGS

Since the last meeting in May 2023, there have been two (2) functions at the Tomingley Memorial Hall. There is one (1) forward booking for the next six (6) months up to May 2024.

TOMINGLEY MEMORIAL HALL BOOKINGS	
NAME	**EVENT DATE**
Private Booking	7 June 2023
Private Booking	13 & 14 October 2023
Private Booking	27 April 2024

RECOMMENDATION

That the information be noted.

4. FINANCIAL REPORT

The Tomingley Advancement Association Committee Financial Report is reflected in **Attachment No. 2.**

RECOMMENDATION

That the Financial Report as presented be adopted.

5. NEXT MEETING

The next Tomingley Advancement Association Committee meeting will be held on Monday, 13 May 2024, at 6 pm at the Tomingley Memorial Hall.

RECOMMENDATION

That the information be noted.

Phil Johnston
Director, Community, and Economic Development

TOMINGLEY ADVANCEMENT ASSOCIATION
Bank Reconciliation
9/11/2023

.

Balance of Bank Account as at 01.07.23	$	6,327.59
Add Receipts	$	-
Less Payments	$	-
Balance of Working Funds 09/11/2023	**$**	**6,327.59**
Bonds Held	$	-
Sub Total	$	6,327.59
Balance as Per Bank Statement 09/11/2023	$	6,327.59
Reconciled Balance	$	6,327.59
Check:	**$**	**-**

Balance Sheet Check:

Reconciled Bank Balance 1 July 2023	$	6,327.59
Profit Year to Date	$	-
Security Bonds Held	$	-
Reconciled Bank Balance 9/11/2023	**$**	**6,327.59**
Reconciled Balance	$	6,327.59
Check:	$	-

MINUTES OF THE NARROMINE SHIRE COUNCIL AUDIT RISK AND IMPROVEMENT COMMITTEE MEETING HELD IN COUNCIL CHAMBERS ON MONDAY 10 NOVEMBER 2023

PRESENT: Grahame Marchant (Chair) – Independent External Member, Jane Redden - General Manager NSC, Barry Bonthuys - Director Finance & Corporate Strategy NSC, Marion Truscott - Director Governance NSC and Sally McDonnell (Minute Taker)

Via Teams – Neil Maltby – Independent External Member, Ross Earl – Independent External Member, Alex Hardy - Prosperity Advisor Group

1. WELCOME

The Chair welcomed everyone to the Narromine Shire Council Audit Risk and Improvement Committee meeting and declared the meeting open at 12.10pm.

The Chair especially welcomed Ross Earl as an Independent Member to the Committee.

2. APOLOGIES

Cr Adine Hoey and Unaib Jeoffrey – Audit Office of NSW

3. DISCLOSURES OF INTEREST

Nil

4. CONFIRMATION OF PREVIOUS MINUTES – 4 SEPTEMBER 2023

RECOMMENDED Neil Maltby/Grahame Marchant that the Minutes of the Narromine Shire Council Audit Risk and Improvement Committee Meeting held on 4 September 2023 be adopted as a true and correct record of the meeting.

5. BUSINESS ARISING FROM MINUTES

It was noted that the report on Project Management is to be deferred to the next meeting.

6. EXTERNAL AUDIT

Alex Hardy – Prosperity Advisor Group provided comment to the Committee in relation to the External Audit, Annual Financial Statements and the Engagement Closing Report.

It was noted that the External Audit is almost complete. Upon completion the Final Management Letter will be issued.

Alex Hardy stated that this was the last audit Prosperity Advisor Group would be conducting and thanked Management for their co-operation throughout their 5 year engagement.

Alex Hardy – Prosperity Advisor Group left the meeting at 12.37pm

6. EXTERNAL AUDIT (Cont'd)

RECOMMENDED Neil Maltby/Ross Earl;

1. That the Committee endorses the Audited Y/E 23 Annual Financial Statements and the Y/E Engagement Closing Report for consideration by Council.
2. That it be noted the Committee will receive the Independent Auditors Report & Report on Conduct of Y/E 23 Audit and the Y/E Final Management Letter in due course.

7. IMPLEMENTATION OF RECOMMENDATIONS/CORRECTIVE ACTIONS

RECOMMENDED Grahame Marchant/Neil Maltby that the information be noted in relation to the progress with implementation of the Committee's recommendations.

8. LEGISLATIVE COMPLIANCE/BREACH REPORTING

RECOMMENDED Neil Maltby/Grahame Marchant that the Committee notes there are no identified legislative compliance breaches to be reported to date.

9. COMPLIANCE MONITORING – OFFICE OF LOCAL GOVERNMENT CIRCULARS

RECOMMENDED Neil Maltby/Grahame Marchant that the Committee notes the actions taken to date in relation to the recent Circulars issued by the Office of Local Government.

10. MAJOR PROJECTS AND BUSINESS INITIATIVES

The General Manager provided a verbal update noting that all major projects are underway or in the planning or procurement stages.

It was agreed that the Committee be provided with details of the internal reporting framework for the review and management of major projects including risk management assessments of these projects to a future meeting of the Committee.

11. RISK MANAGEMENT – SIGNIFICANT AND EMERGING ISSUES

The Director Governance advised that the Internal Auditors have been appointed and have begun scoping the first two audits, being Development Applications and Consents and Staff Attraction and Retention, with a view to having the audits finalised for the March ARIC meeting.

It was noted that a report on Council's Risk Management Framework, including the Strategic Risk Register is to be presented at the next meeting.

12. ANY OTHER BUSINESS

The Chair acknowledged the resignation of Neil Maltby, thanked him for his commitment to the Committee and wished him well for the future.

It was noted that a report will be presented to Council to appoint the new Chair.

13. DATE OF NEXT MEETING

The next Audit Risk and Improvement Committee meeting will be held on Monday, 11 March 2024 commencing at 10.00am.

14. CONCLUSION OF MEETING

The Chair thanked all members for attending.

There being no further business the meeting concluded at 12.58pm.

The Minutes (pages 1 to 3) were confirmed at a meeting held on the

day of 2024, and are a full and accurate record of proceedings

of the meeting held on 10 November 2023.

CHAIR

MINUTES OF THE LOCAL TRAFFIC COMMITTEE HELD AT THE NARROMINE SHIRE COUNCIL CHAMBERS ON MONDAY 4 DECEMBER 2023

PRESENT: Cr Dawn Collins (Chair, Narromine Shire Council), Ewen Jones (Delegate for State Member), Jane Redden (General Manager, Narromine Shire Council); Melanie Slimming (Director Infrastructure and Engineering Services, Narromine Shire Council); Peter van der Wel (Manager Infrastructure Delivery, Narromine Shire Council); Jordan Richardson (Manager Engineering, Narromine Shire Council); Jason Nicholson (Transport for NSW), Michael Donley (Sargeant, Orana Mid-Western Police District, NSW Police), Geraldine Prince (Minute Taker)

IN ATTENDANCE:

1. WELCOME

The Chair welcomed those present and declared the meeting opened at 9.32am.

2. APOLOGIES

Nil

3. MINUTES OF THE PREVIOUS MEETING

RECOMMENDED Ewen Jones/Jason Nicholson that the Minutes of the previous adjourned meeting of the Local Traffic Committee held on 9 October 2023 be accepted as a true and accurate record of the discussions held at that meeting.

4. BUSINESS ARISING FROM PREVIOUS MINUTES

Burroway Street

Cr Dawn Collins queried the gravel area along Burroway Street. Jordan Richardson advised that there is a design to upgrade the area which will include sealing and line marking for car parking, bus zone and a dedicated heavy vehicle stop.

Cr Dawn Collins expressed concerns regarding the school bus pick up/drop off near the boulders in Burroway Street as this road is usually busy at these times and most children get off the bus and cross the road. There is a designated bus stop (for the public bus route) opposite the Police Station, on Burroway Street, this would be a preferred option. It was suggested that a letter be sent by Council to the bus operator/s requesting that the designated bus stops/shelters are used. Drivers to comply with the bus driver authority.

Faded Signs

Signs have been replaced throughout Narromine. All faded signs were lodged as CRM's.

DECLARATION OF PECUNIARY/CONFLICT OF INTEREST

Nil

5. REPORT TO LOCAL TRAFFIC COMMITTEE

1. PARKING SIGNAGE ALONG BURROWAY STREET, NARROMINE

RECOMMENDED Ewen Jones/Jason Nicholson that "No Parking" signs be placed adjacent to Ampol Service Station between the boulders and the fog line. Design is to upgrade the pavement, including line markings and then seal the area.

2. SIGNAGE ALONG NYMAGEE STREET, NARROMINE HARDWARE

RECOMMENDED Ewen Jones/Jason Nicholson that No Parking and 90-degree Parking signs be placed outside Narromine Hardware along the kerb.

3. NYMAGEE STREET PARKING ARRANGEMENT – POST OFFICE

RECOMMENDED Ewen Jones/Michael Donley that this item be deferred with a further design be presented to the February committee meeting.

4. GIVEWAY SIGNAGE INSTALLATION – TRANGIE

RECOMMENDED Ewen Jones/Jason Nicholson that Give way signage be installed and line marking provided in the following streets of Trangie being Trangie Showground Road, Croudace Street, Trangie Cemetery Road and Mungery Street. VMS board to display changed traffic signage. An additional Give Way Sign Ahead (W3-2) is to be installed before the bend on the Showground Road to warn motorists of the new road changes.

5. CARAVAN PARKING – O'NEIL SQUARE

RECOMMENDED Ewen Jones/Jason Nicholson that Caravan Parking signage be installed along Burroway Street within O'Neil Square.

GENERAL BUSINESS

Ewen Jones requested that the Glenn McGrath sign be moved or the tree trimmed.

Alkane Project update - the project is pushing ahead with the realignment of the highway. Correspondence to be presented to Tomingley residents. Invitation to be extended to Mike Sutherland to attend the Tomingley Christmas Dinner.

Tactile Tiles – scoping document has now been completed – 8 locations have now been identified.

GENERAL BUSINESS (Cont'd)

Peter van der Wel asked if a traffic camera could be installed on Manildra Street due to the speed at which the traffic drives along this street. Michael Donley stated that Highway Patrol could potentially assign patrol cars to look at this area. This is a safety issue with the speed and the noise. Michael Donley to raise this matter with the Police in regard to monitoring the speeds. VMS boards to warn motorist to reduce speed, 50km zone to be set up by Council.

Cr Collins expressed concern regarding B Doubles driving through the main street instead of using Manildra and Culling Streets.

7. NEXT MEETING

The next Meeting of the Local Traffic Committee will be held on **Monday, 5 February 2024** commencing at **9.30am** in the Narromine Shire Council Chambers.

There being no further business, the meeting closed at 10.15am.

The Minutes (pages 1-3) were confirmed on and are a full and accurate record of proceedings of the meeting held on 4 December 2023.

CHAIR

NARROMINE SHIRE COUNCIL
LOCAL TRAFFIC COMMITTEE MEETING BUSINESS PAPER – 4 DECEMBER 2023

1. PARKING SIGNAGE ALONG BURROWAY STREET, NARROMINE

Author *Manager Engineering Services*
Responsible Officer *Manager Engineering Services*

Executive Summary

The purpose of this report is to discuss with the Local Traffic Committee information regarding recommendation of no parking signage where the boulders have been installed along Burroway Street.

Report
It has been observed since the installation of the barriers along Burroway St at the informal parking space adjacent to Ampol Service Station that vehicles are parking between the barriers and the barrier line creating a hazard to motorists.

Standards
AS1742.11:2016 – Parking Controls
AS2890.5:2020 – Parking Facilities On-Street Parking

Financial Impacts
The installation is to be part of the Urban Maintenance expenditure budget.

Social Impacts
There is expected to be minimal impact as vehicles stopping create a hazard and there is an unofficial parking space adjacent if vehicles need to park.

Legal Impacts
Vehicles stopping need to be managed as per the legislative requirements associated with No Parking.
No stopping was considered however deemed no parking necessary for the site.

RECOMMENDATION

That:

That the traffic committee consider and make recommendations relating to the parking zone report and design as attached.

Attachments:
1. No Parking Signage Layout
2. R5-40 Signage Layout
3. Signage Installation Standard Drawing

Jordan Richardson
Manager of Engineering Services

R5–40 (L)

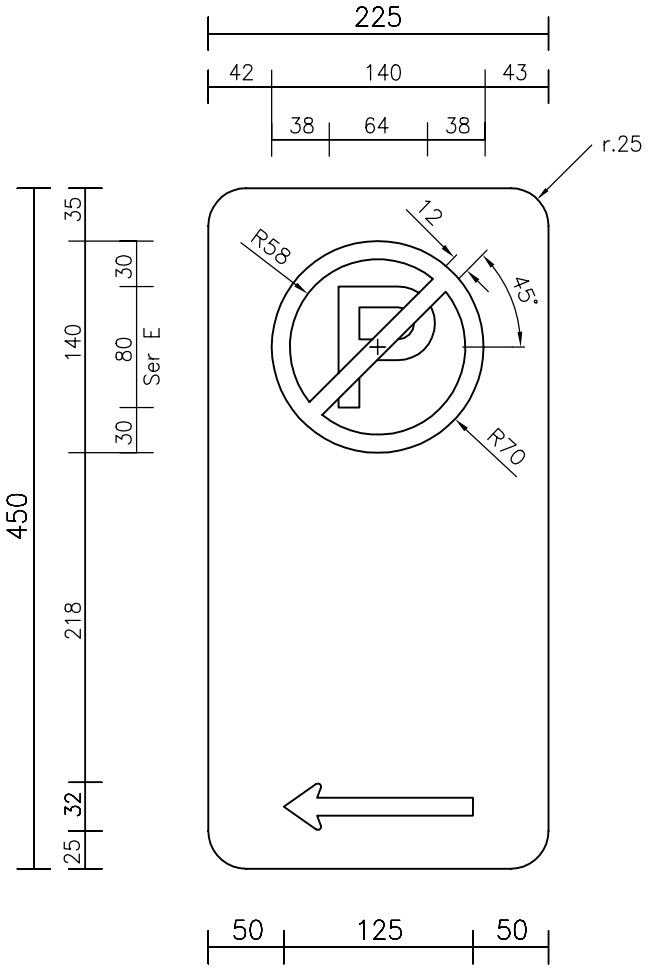

Red arrow, annulus & slash,
black letter P, on white ground.

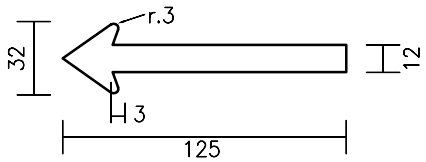

Detail of Arrow

Scale 1:5

TITLE		
REGULATORY SIGN	Date: 1/11/02	RTA
R5–40 (L)	Checked: J. Rozos	
	Drawn: F. Rios	
	Rev. 1	
	File (Sign) K:\TTT\DRAWINGS\REGULAT\R5–40L.DWG	

R5–40 (L+R)

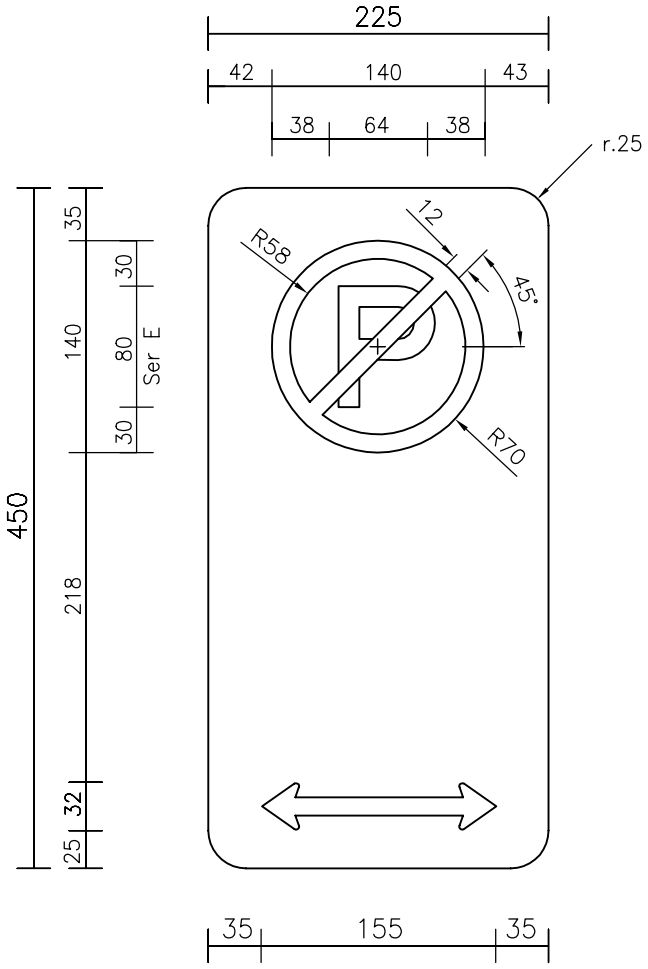

Red arrow, annulus & slash,
black letter P, on white ground.

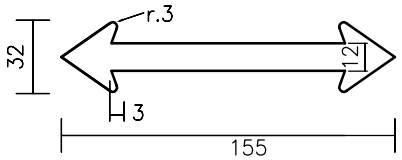

Detail of Arrow

Scale 1:5

TITLE	Date: 1/11/02	RTA
REGULATORY SIGN	Checked: J. Rozos	
R5–40 (L+R)	Drawn: F. Rios	
	Rev. 1	
	File (Sign) K:\TTT\DRAWINGS\REGULAT\R5–40LR.DWG	

R5–40 (R)

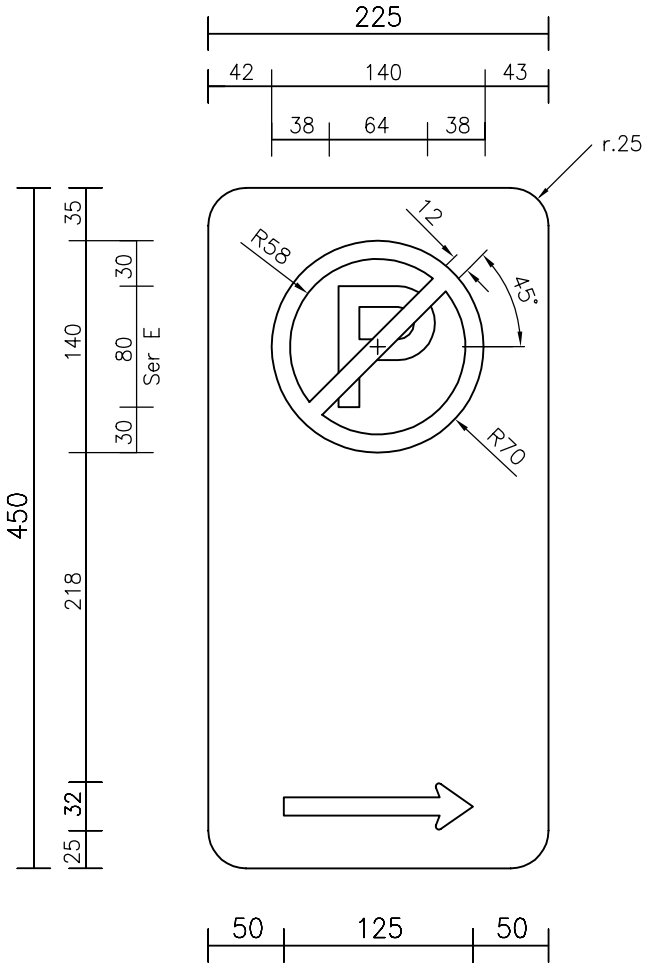

Red arrow, annulus & slash,
black letter P, on white ground.

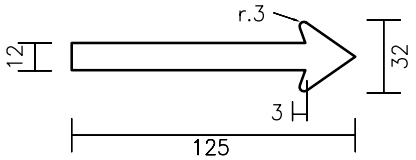

Detail of Arrow

Scale 1:5

TITLE		
REGULATORY SIGN R5–40 (R)	Date: 1/11/02	RTA
	Checked: J. Rozos	
	Drawn: F. Rios	
	Rev. 1	
	File (Sign) K:\TTT\DRAWINGS\REGULAT\R5–40R.DWG	

CAUTION
Confirm existence of services prior to installation of sign

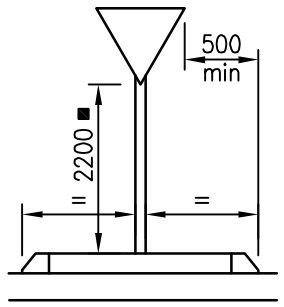

MEDIANS

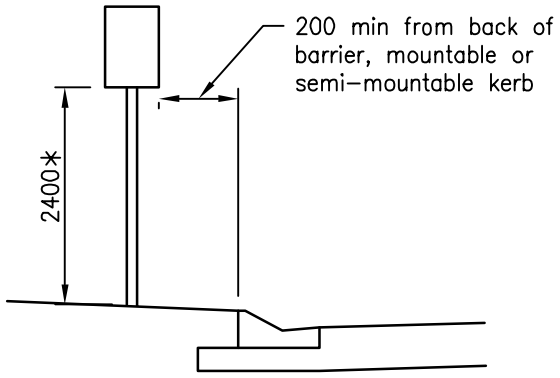

RESIDENTIAL AREAS

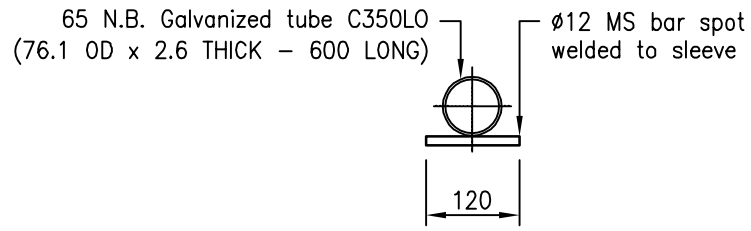

POST SLEEVE DETAIL

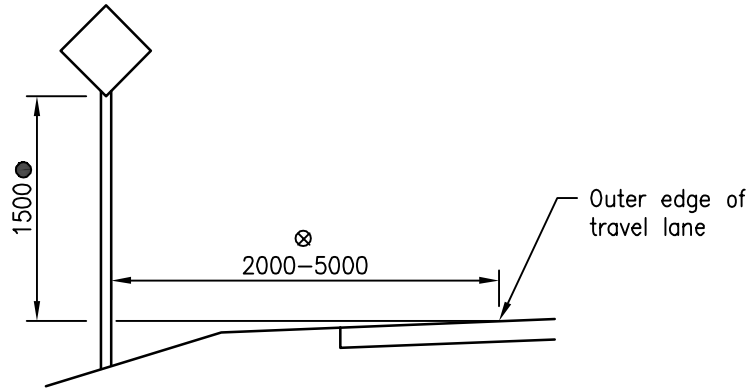

RURAL ROADS LOCATION OF SIGNS

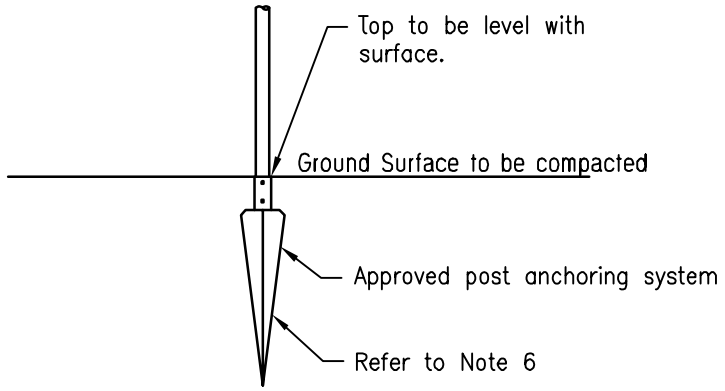

EMERGENCY/TEMPORARY POST ANCHOR

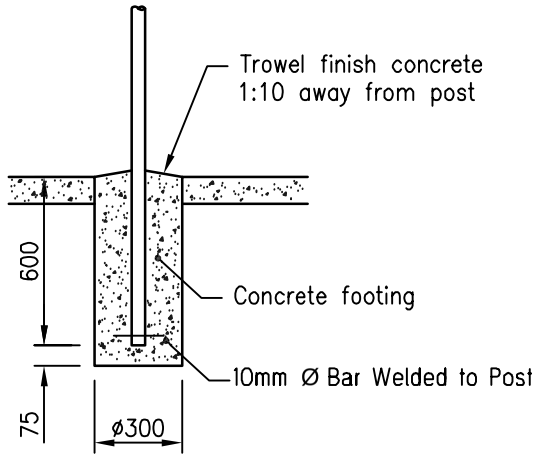

CONCRETE FOOTING

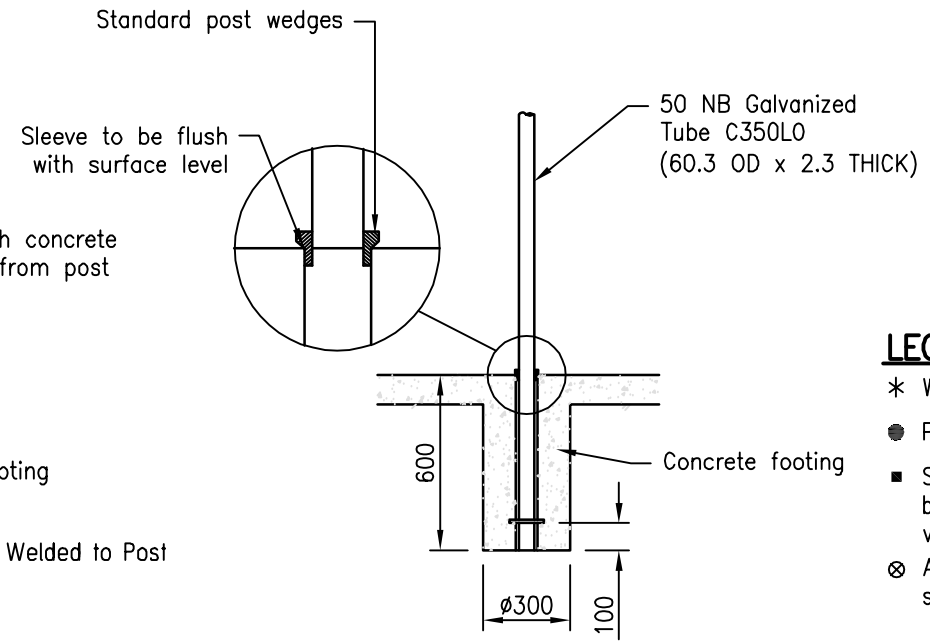

POST SLEEVE
REFER NOTE 8

LEGEND

✳ When sign overhangs a pathway, dimension to be 2500.

● Parking and Guide signs to be 2200 above road surface.

■ Some signs (Keep Left, No–U Turn, D4 Hazard series) to be mounted at 525. Height can be adjusted if there is a visibility problem.

⊗ At least 600 clearance to be provided to outer edge of shoulder, line of guide posts or guardrail.

NOTES:

1. All signs are to be approved by Council prior to erection
2. Signs to be positioned on the side of street/road that provides best visibility. Underground services are to be located prior to installation
3. Concrete N20 in accordance with AS1379 and AS3600
4. Bars Ø10 ⁄ Grade 250 to AS1302
5. Refer to MUTCD for sign locations
6. Council approved post anchoring systems to be installed to comply with manufacturers specifications. Other post mounting systems may be used if approved by Council
7. All dimensions are in millimetres unless shown otherwise
8. Signs must be attached to post with Anti–Theft vandal proof fasteners
9. Concrete to be min. N20 with 80 Slump

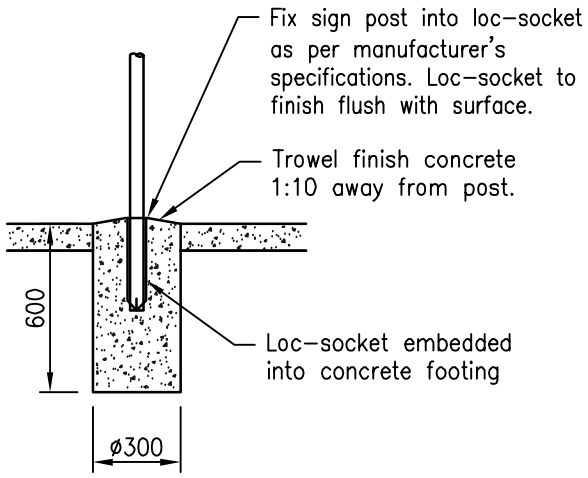

LOC–SOCKET (OR SIMILAR)

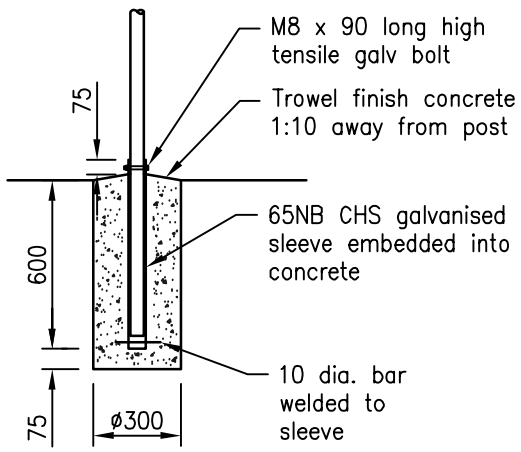

TYPICAL SLEEVE

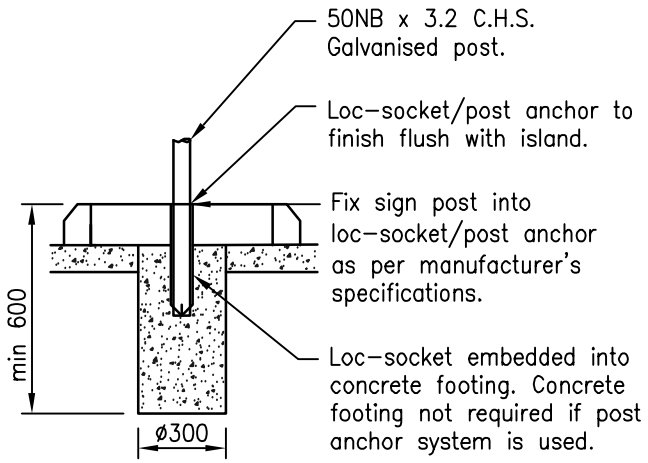

MEDIANS

These drawings have been developed in consultation between the participating Councils.
BEFORE USE the user shall confirm that the drawing has been adopted by the appropriate Council.

NOT TO SCALE

DIAL BEFORE YOU DIG www.1100.com.au

REV.	DATE	DESCRIPTION	DRAWN	CHECK	APPROVED
1	100720	STANDARD DRAWING CREATED	JR	JR	AP

INITIALLY APPROVED BY:

DATE:

NARROMINE SHIRE COUNCIL
T: 02 6889 9999 F: 02 6889 9944
E: admin@narromine.nsw.gov.au
A: 124 DANDALOO ST NARROMINE NSW 2821
W: www.narromine.nsw.gov.au

DO NOT SCALE
Conditions of use.
This document may only be used by Narromine Shire Councils client
(and any other person who NSC has agred can use this document)
for the purposes of which it was preparedand must not be use by any other person or for any other purpose

CLIENT: ENGINEERING
PROJECT: ENGINEERING STANDARDS
TITLE: TRAFFIC INSTALLATION GUIDELINES

SIZE: A3 PAGE #1 DRAWING #1

Scale: AS SHOWN REVISION # 1

LEGEND:

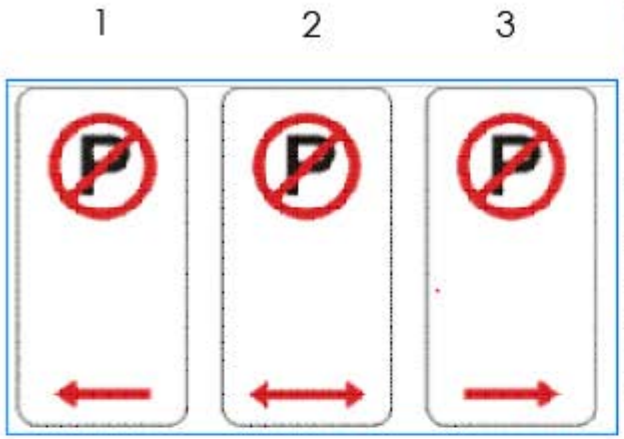

Notes:

- sign to be supplied by reputable supplier to AS 1742.11:2016m see drawing #1
- sign code – R5–40
- sign size to be standard
- no time limit on sign
- sign spacing as per Australian Standards – max. 75m
- lateral placement as per Australian Standards
- sign height to Australian Standards, see drawing #2
- see legend for sign type placement

DIAL BEFORE YOU DIG
www.1100.com.au

1	051023	CONCEPT CREATED	JR	JR	

INITIALLY APPROVED BY:

NARROMINE SHIRE COUNCIL

[redacted]

CLIENT: NARROMINE SHIRE COUNCILARTC
PROJECT: NARROMINE PARKING AREA SIGNAGE
TITLE: NARROMINE PARKING AREA

SIZE: A3 PAGE #1 DRAWING #1

DATE:

Scale: AS SHOWN REVISION #1

2. NYMAGEE STREET PARKING ARRANGEMENT - HARDWARE

Author *Manager Engineering Services*
Responsible Officer *Manager Engineering Services*

Executive Summary

The purpose of this report is to obtain comment and recommendation of signage along the footpath upgrade in Nymagee Street, Narromine outside the Hardware.

Report
As part of the Nymagee St Footpath Renewal Project Traffic Facility installation is required which includes Traffic Committee approval for the installation of signage for R5-505 and R5-40 signage at the attached locations.

The determination of 90-degree parking has been determined as appropriate for this site. Disability parking will be allowed for included as per standards.

Standards
AS1742.11:2016 – Parking Controls
AS2890.5:2020 – Parking Facilities On-Street Parking

Financial Impacts
The installation to be part of the capital budget for expenditure from FAGS.

Social Impacts
There is expected to be minimal impacts as vehicle stops have already been installed creating an existing trend for vehicles to follow.

Legal Impacts
Vehicles obey the signed traffic parking.

RECOMMENDATION

That:
1. That the traffic committee consider and make recommendations relating to the parking zone report and design as attached;

Attachments:
1. No Parking Signage Layout
2. R5-40 Signage Layout
3. Signage Installation Standard Drawing

Jordan Richardson
Manager of Engineering Services

Busy Business Entrance
TRESCHERS LANE
MERILBA STREET
stage 1
NYMAGEE STREET
stage 2
TEMORA STREET

TASK 126 AMP6 FOOTPATH CONSTRUCTION - NYMAGEE ST NARROMINE

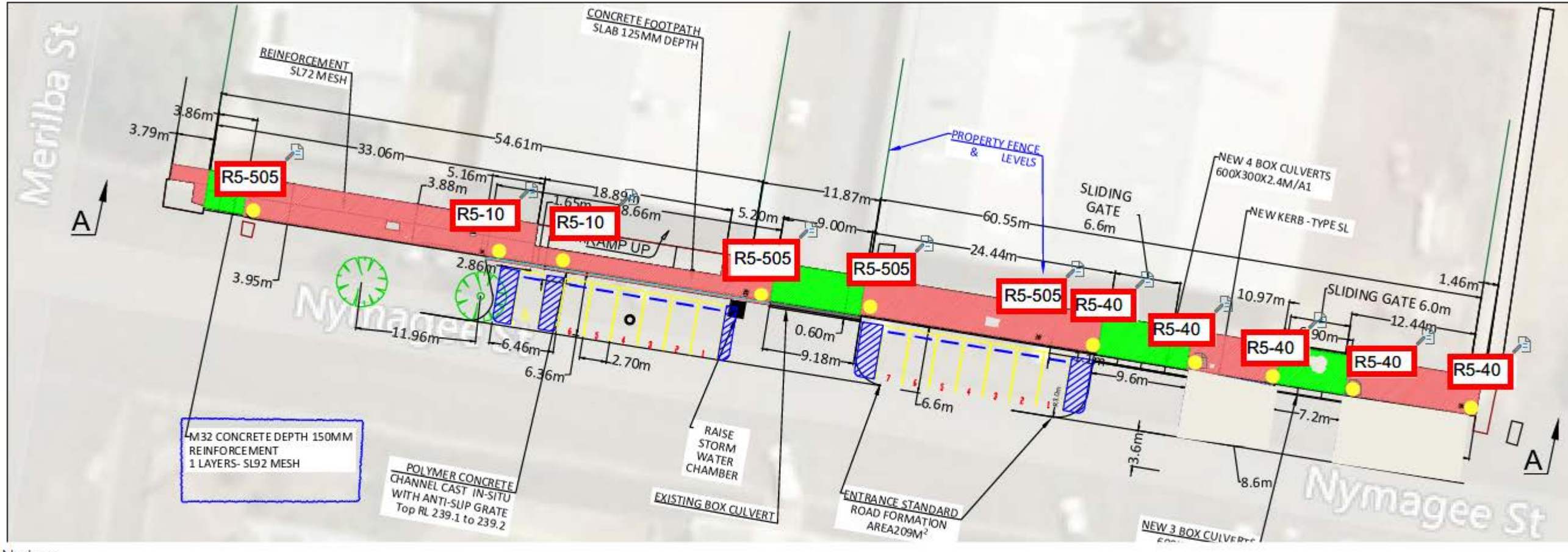

Notes:

- sign to be supplied by reputable supplier to AS 1742.11:2016m see drawing #1
- sign code – R5–40 (NO PARKING), R5–505 (90 DEGREE PARKING) and R5–10 (DISABLED PARKING)
- sign size to be standard
- rear to kerb parking at 90 degrees
- no time limit on sign
- sign spacing as per Australian Standards – max. 75m
- lateral placement as per Australian Standards
- sign height to Australian Standards, see drawing #2
- see legend for sign type placement

CAUTION
Confirm existence of services prior to installation of sign

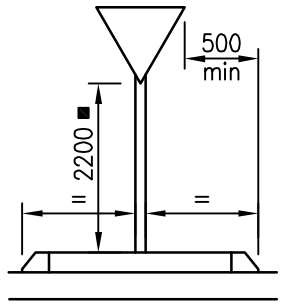

MEDIANS

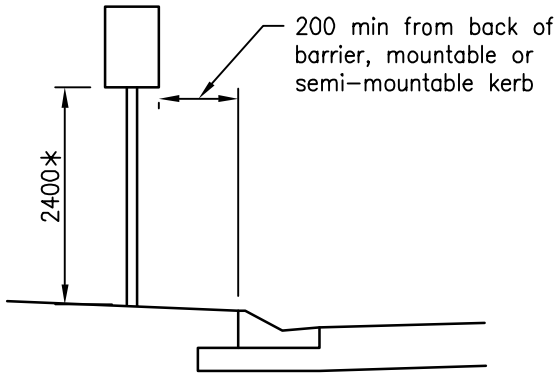

RESIDENTIAL AREAS

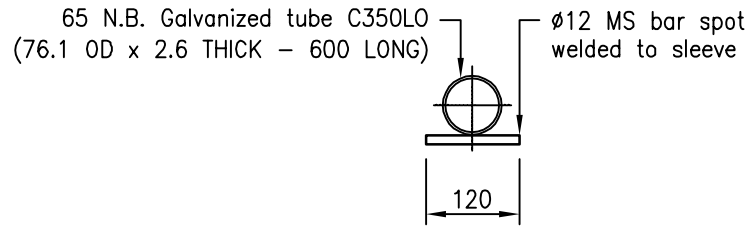

POST SLEEVE DETAIL

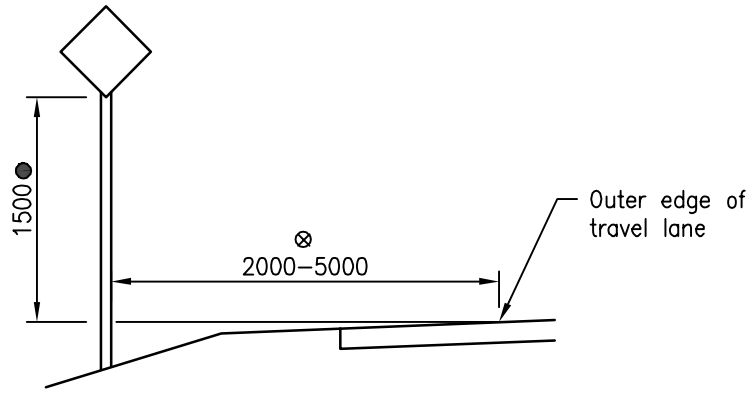

RURAL ROADS LOCATION OF SIGNS

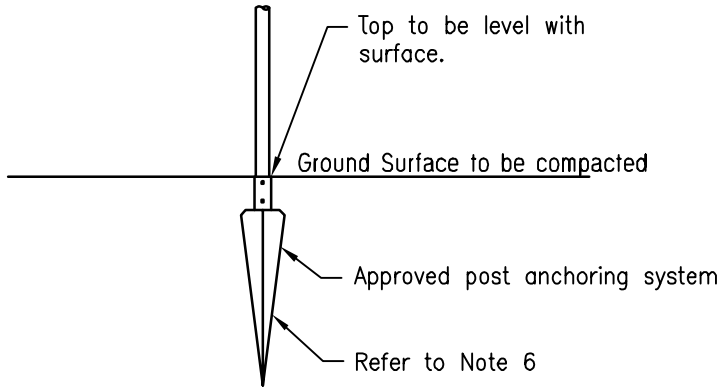

EMERGENCY/TEMPORARY POST ANCHOR

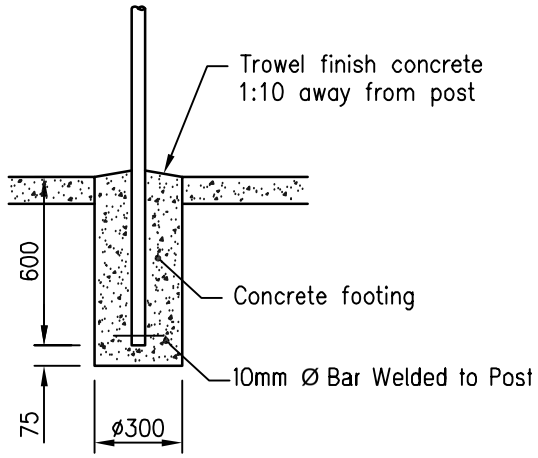

CONCRETE FOOTING

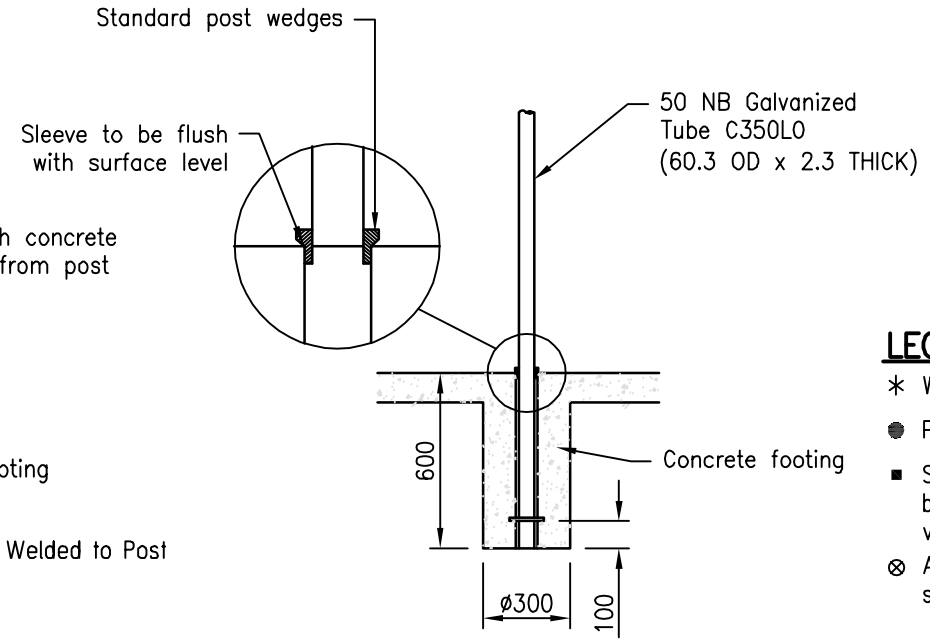

POST SLEEVE
REFER NOTE 8

LEGEND

✳ When sign overhangs a pathway, dimension to be 2500.

● Parking and Guide signs to be 2200 above road surface.

■ Some signs (Keep Left, No–U Turn, D4 Hazard series) to be mounted at 525. Height can be adjusted if there is a visibility problem.

⊗ At least 600 clearance to be provided to outer edge of shoulder, line of guide posts or guardrail.

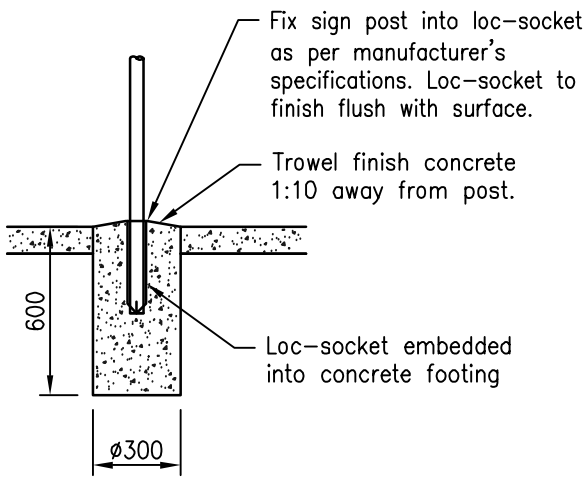

LOC–SOCKET (OR SIMILAR)

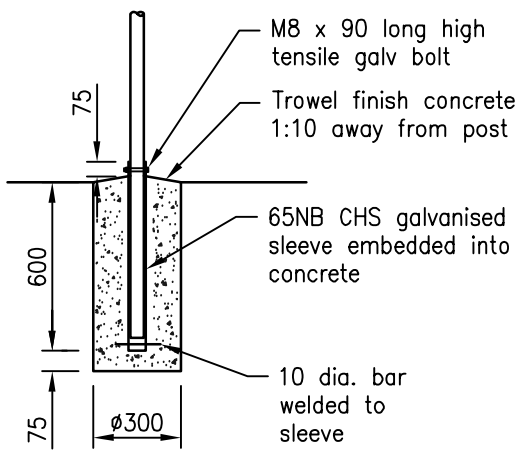

TYPICAL SLEEVE

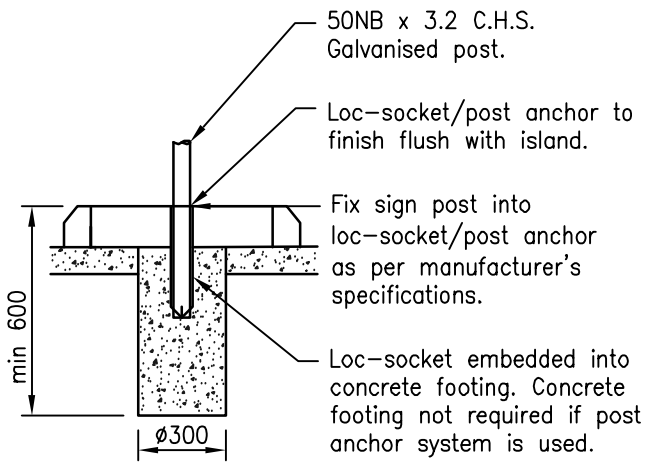

MEDIANS

NOTES:

1. All signs are to be approved by Council prior to erection
2. Signs to be positioned on the side of street/road that provides best visibility. Underground services are to be located prior to installation
3. Concrete N20 in accordance with AS1379 and AS3600
4. Bars Ø10⁄1Grade 250 to AS1302
5. Refer to MUTCD for sign locations
6. Council approved post anchoring systems to be installed to comply wi manufacturers specifications. Other post mounting systems may be use if approved by Council
7. All dimensions are in millimetres unless shown otherwise
8. Signs must be attached to post with Anti–Theft vandal proof fastene
9. Concrete to be min. N20 with 80 Slump

These drawings have been developed in consultation between the participating Councils.
BEFORE USE the user shall confirm that the drawing has been adopted by the appropriate Council.

NOT TO SCALE

DIAL BEFORE YOU DIG www.1100.com.au

REV.	DATE	DESCRIPTION	DRAWN	CHECK	APPROVED
1	100720	STANDARD DRAWING CREATED	JR	JR	AP

INITIALLY APPROVED BY:

DATE:

NARROMINE SHIRE COUNCIL
T: 02 6889 9999 F: 02 6889 9944
E: admin@narromine.nsw.gov.au
A: 124 DANDALOO ST NARROMINE NSW 2821
W: www.narromine.nsw.gov.au

DO NOT SCALE
Conditions of use.
This document may only be used by Narromine Shire Councils client
(and any other person who NSC has agred can use this document)
for the purposes of which it was preparedand must not be use by any other person or for any other purpose

CLIENT: ENGINEERING
PROJECT: ENGINEERING STANDARDS
TITLE: TRAFFIC INSTALLATION GUIDELINES

SIZE: A3 PAGE #1 DRAWING #1

Scale: AS SHOWN REVISION # 1

3. NYMAGEE STREET PARKING ARRANGEMENT – POST OFFICE

Author *Manager Engineering Services*
Responsible Officer *Manager Engineering Services*

Executive Summary

The purpose of this report is to discuss with the Local Traffic Committee information regarding recommendation of parking arrangements at the Post Office.

Report
As requested by the Local Traffic Committee at the last meeting a review of the parking arrangements at the Post Office has been conducted.
The review included:

- survey work to ascertain geometrical distances.
- drawings to investigate difference options between the different parking spaces.

Standards
AS1742.11:2016 – Parking Controls
AS2890.5:2020 – Parking Facilities On-Street Parking

Guidelines
Austroads Design Vehicles and Turning Path Templates Guide

Financial Impacts
The installation is to be part of the Urban Maintenance expenditure budget.

Social Impacts
Depending on the adopted angle there is expected to be some impacts associated with the changes as the area is highly trafficked.

Legal Impacts
Vehicles will be required to obey the signed traffic parking.

Findings

- The onsite car park along Nymagee Street between Dandaloo Street and Third Avenue on the North Side is not to standard nor fully defined.
- The on-street parking along Nymagee Street between Dandaloo Street and Fifth Avenue on the South Side is not standard nor fully defined correctly.
- The footpath is made up of bitumen and concrete and in very poor condition. Pushing car parking further west will require pedestrians to walk further on the footpath to reach the CBD.
- The road centre line is offset to the South due to the footpath median on the North being of greater width creating the conflict point for vehicles travelling along Nymagee Street.

- Existing R5-301 (1/4 HOUR PARKING) signage is superseded and does not define the angle of parking
- There is no line marking in the study area

Conclusion

- The design option number for installation of 45-degree parking on North and South Side of Nymagee Street between Dandaloo Street Third and Fifth Avenue will be of the greatest benefit for parking numbers and safety to motorists whilst being closest to the existing parking arrangements.

RECOMMENDATION

That:

That the traffic committee consider recommendation and make a formal recommendation relating to the issue.

Attachments:

1. Existing Parking Signage Photographs
2. Travel Paths
3. Signage Layout Before
4. Signage Layout After
5. Parking Arrangement Options
6. Recommendation

Jordan Richardson
Manager of Engineering Services

PHOTOGRAPH REFERENCE #1

PHOTOGRAPH REFERENCE #2

PHOTOGRAPH REFERECE #3

PHOTOGRAPH REFERENCE #4

PHOTOGRAPH REFERENCE #5

PHOTOGRAPH REFERENCE #6

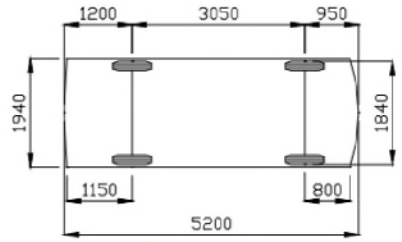

Figure 3.1: Passenger vehicle (5.2 m)

REV.	DATE	DESCRIPTION	DRAWN	CHECK	APPROVED
1	29/11/23	PARKING REVIEW	JR	JR	JR

DATE: 29/11/2023

NARROMINE SHIRE COUNCIL
T: 02 6889 9999 F: 02 6889 9944
E: admin@narromine.nsw.gov.au
A: 124 DANDALOO ST NARROMINE NSW 2821
W: www.narromine.nsw.gov.au

DO NOT SCALE
Conditions of use.
This document may only be used by Narromine Shire Councils client
(and any other person who NSC has agred can use this document)
for the purposes of which it was preparedand must not be use by any other person or for any other purpose

CLIENT: NARROMINE SHIRE COUNCIL
PROJECT: NYMAGEE STREET
TITLE: TURNING PATHS

SIZE: A3 PAGE # 1 DRAWING # NSC-JR-LTC001

Scale: AS SHOWN REVISION #1

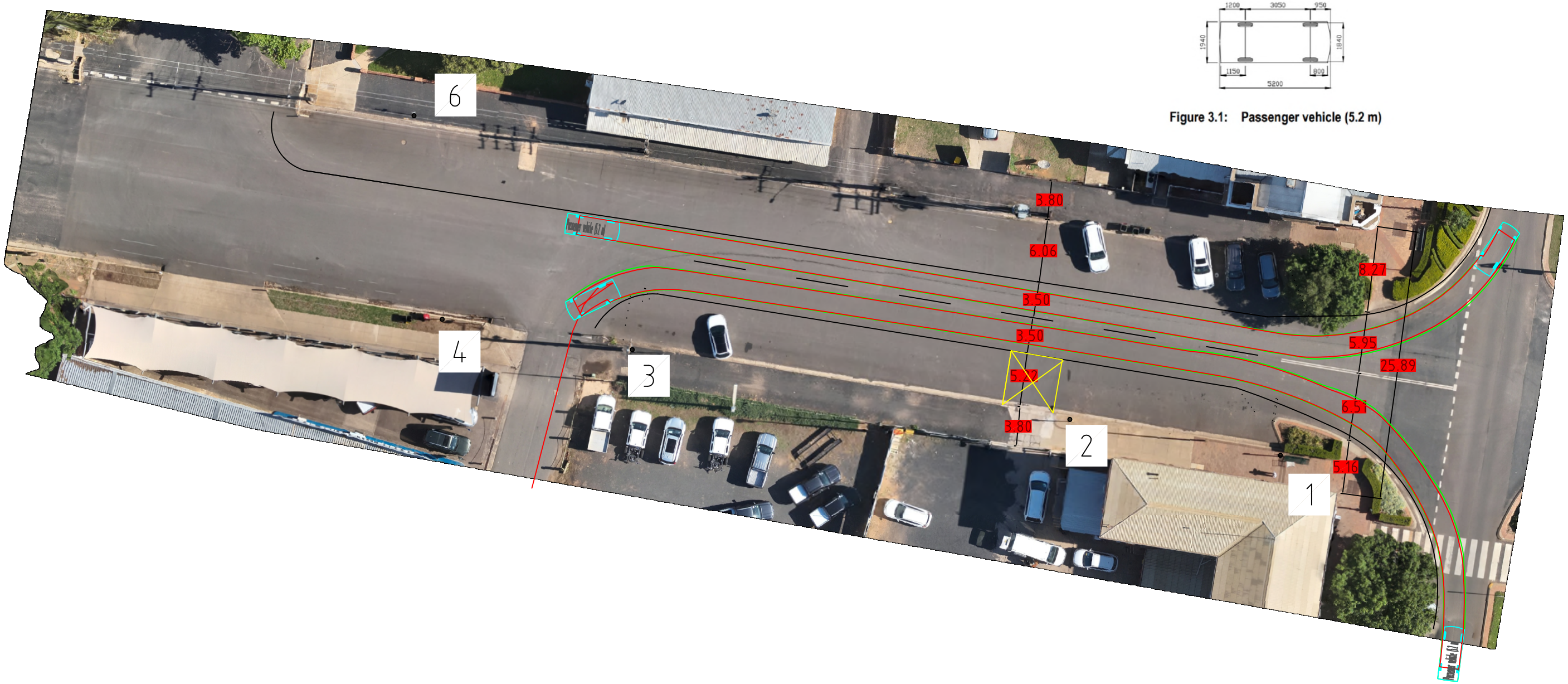

Figure 3.1: Passenger vehicle (5.2 m)

id	description	CONDITION	x	y
1	1/4 HOUR PARKING – 900am – 500pm MON – FRI (R)	POOR	616767.70	6433180.00
2	1/4 HOUR PARKING – 900am – 500pm MON – FRI (L)	POOR	616705.50	6433190.00
3	60 d ANGLE PARKING REAR TO KERB VEHICLES UNDER 6m ONLY (L), NO PARKING (R)	POOR	616704.30	6433189.30
4	60 d ANGLE PARKING REAR TO KERB VEHICLES UNDER 6m ONLY (R), NO PARKING (L)	POOR	616689.40	6433192.70
5	45 d ANGLE PARKING REAR TO KERB VEHICLES UNDER 6m ONLY (L), NO PARKING (R)	POOR	616557.80	6433216.00
6	45 d ANGLE PARKING REAR TO KERB VEHICLES UNDER 6m ONLY (R), NO PARKING (L), ALCOHOL FREE ZONE	POOR	616546.90	6433236.10

REV.	DATE	DESCRIPTION	DRAWN	CHECK	APPROVED
1	29/11/23	PARKING REVIEW	JR	JR	JR

DATE: 29/11/2023

NARROMINE SHIRE COUNCIL
T: 02 6889 9999 F: 02 6889 9944
E: admin@narromine.nsw.gov.au
A: 124 DANDALOO ST NARROMINE NSW 2821
W: www.narromine.nsw.gov.au

DO NOT SCALE
Conditions of use.
This document may only be used by Narromine Shire Councils client
(and any other person who NSC has agred can use this document)
for the purposes of which it was preparedand must not be use by any other person or for any other purpose

CLIENT: NARROMINE SHIRE COUNCIL
PROJECT: NYMAGEE STREET
TITLE: EXISTING SIGNAGE LAYOUT

SIZE: A3 PAGE # 2 DRAWING # NSC-JR-LTC002

Scale: AS SHOWN REVISION #1

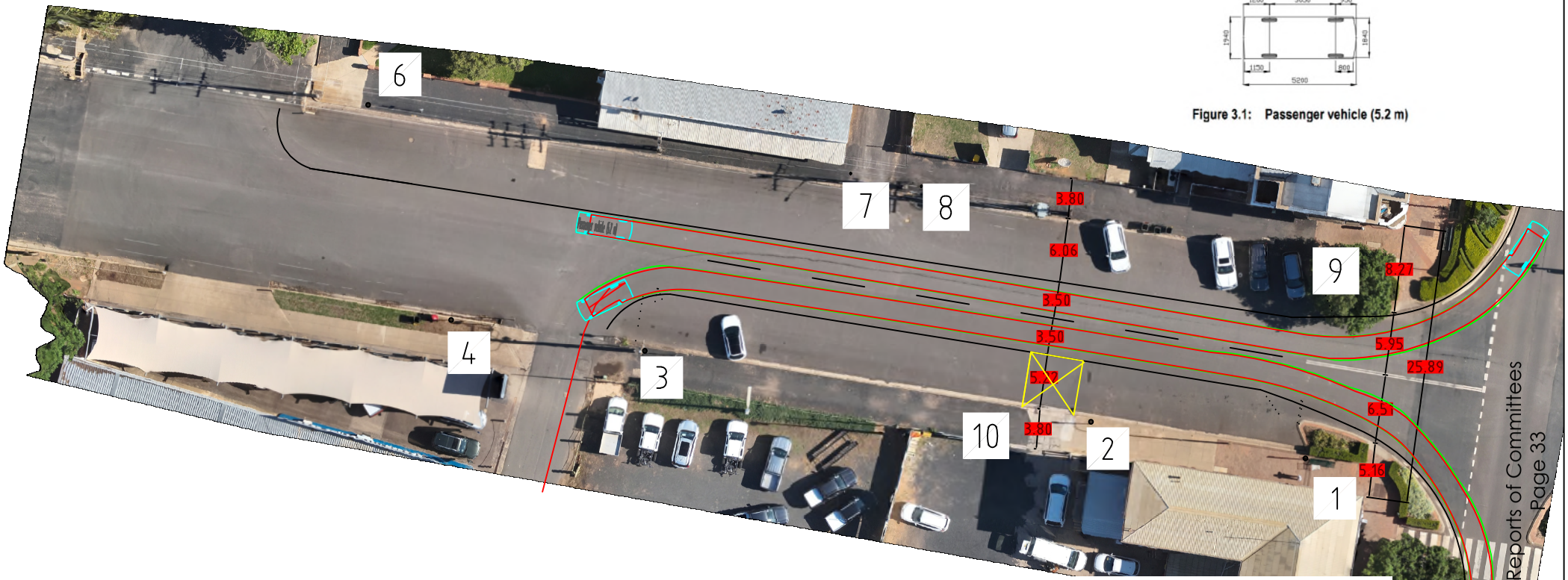

Figure 3.1: Passenger vehicle (5.2 m)

id	description	CONDITION	x	y
1	45 d ANGLE PARKING REAR TO KERB VEHICLES UNDER 6m ONLY (R)	NEW	616767.70	6433180.00
2	45 d ANGLE PARKING REAR TO KERB VEHICLES UNDER 6m ONLY (L), NO PARKING (R)	NEW	616705.50	6433190.00
3	45 d ANGLE PARKING REAR TO KERB VEHICLES UNDER 6m ONLY (L), NO PARKING (R)	NEW	616704.30	6433189.30
4	45 d ANGLE PARKING REAR TO KERB VEHICLES UNDER 6m ONLY (R), NO PARKING (L)	NEW	616689.40	6433192.70
5	45 d ANGLE PARKING REAR TO KERB VEHICLES UNDER 6m ONLY (L), NO PARKING (R)	NEW	616557.80	6433216.00
6	45 d ANGLE PARKING REAR TO KERB VEHICLES UNDER 6m ONLY (R)	NEW	616546.90	6433236.10
7	45 d ANGLE PARKING REAR TO KERB VEHICLES UNDER 6m ONLY (L), NO PARKING (R)	NEW	616651.00	6433218.10
8	45 d ANGLE PARKING REAR TO KERB VEHICLES UNDER 6m ONLY (R), NO PARKING (L)	NEW	616681.30	6433214.00
9	45 d ANGLE PARKING REAR TO KERB VEHICLES UNDER 6m ONLY (L)	NEW	616774.00	6433198.60
10	45 d ANGLE PARKING REAR TO KERB VEHICLES UNDER 6m ONLY (L), NO PARKING (R)	NEW	616741.50	6433184.00

REV.	DATE	DESCRIPTION	DRAWN	CHECK	APPROVED
1	29/11/23	PARKING REVIEW	JR	JR	JR

DATE: 29/11/2023

NARROMINE SHIRE COUNCIL
T: 02 6889 9999 F: 02 6889 9944
E: admin@narromine.nsw.gov.au
A: 124 DANDALOO ST NARROMINE NSW 2821
W: www.narromine.nsw.gov.au

DO NOT SCALE
Conditions of use.
This document may only be used by Narromine Shire Councils client
(and any other person who NSC has agred can use this document)
for the purposes of which it was preparedand must not be use by any other person or for any other purpose

CLIENT: NARROMINE SHIRE COUNCIL
PROJECT: NYMAGEE STREET
TITLE: SIGNAGE LAYOUT

SIZE: A3 PAGE #3 DRAWING # NSC-JR-LTC003

Scale: AS SHOWN REVISION #1

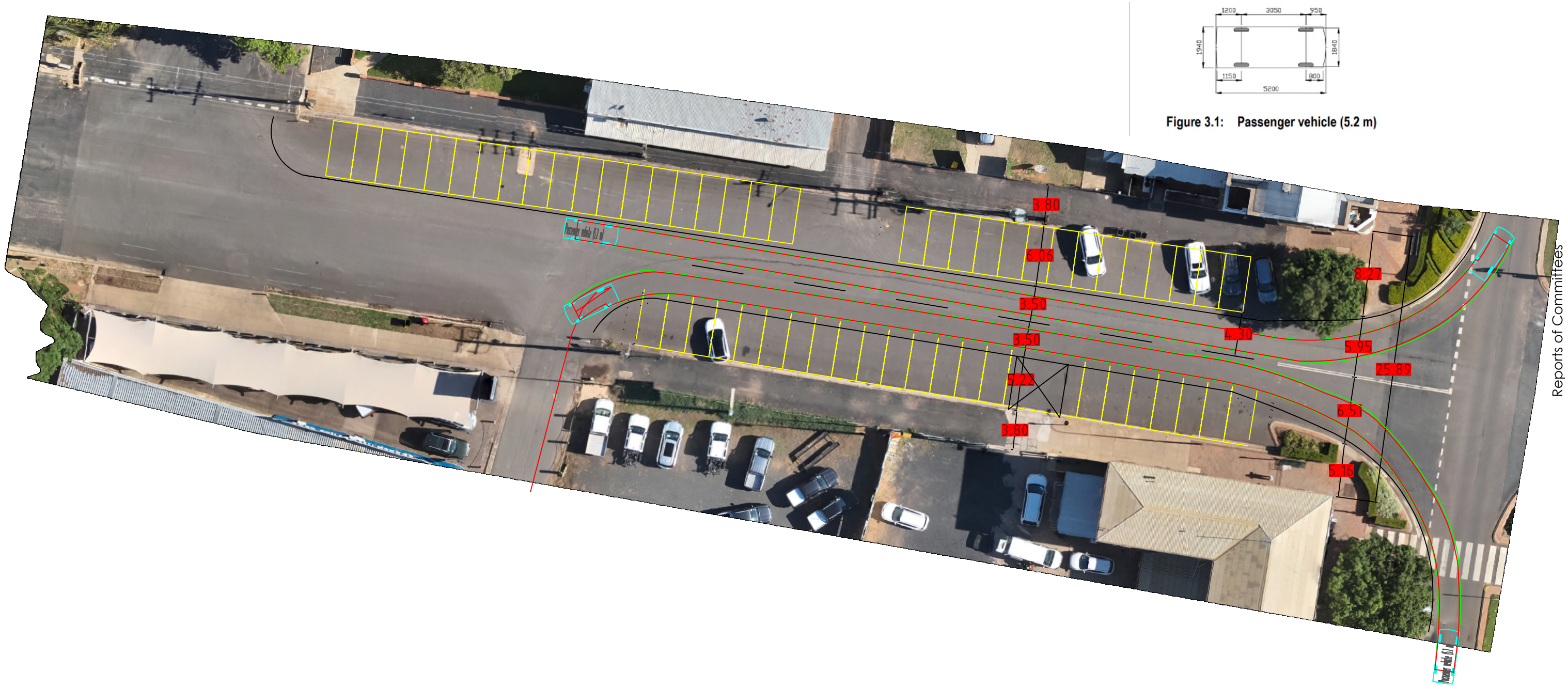

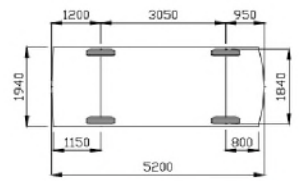

Figure 3.1: Passenger vehicle (5.2 m)

REV.	DATE	DESCRIPTION	DRAWN	CHECK	APPROVED
1	29/11/23	PARKING REVIEW	JR	JR	JR

DATE: 29/11/2023

NARROMINE SHIRE COUNCIL
T: 02 6889 9999 F: 02 6889 9944
E: admin@narromine.nsw.gov.au
A: 124 DANDALOO ST NARROMINE NSW 2821
W: www.narromine.nsw.gov.au

DO NOT SCALE
Conditions of use.
This document may only be used by Narromine Shire Councils client
(and any other person who NSC has agred can use this document)
for the purposes of which it was preparedand must not be use by any other person or for any other purpose

CLIENT: NARROMINE SHIRE COUNCIL
PROJECT: NYMAGEE STREET
TITLE: 90° PARKING LAYOUT

SIZE: A3 PAGE # 4 DRAWING # NSC-JR-LTC004

Scale: AS SHOWN REVISION #1

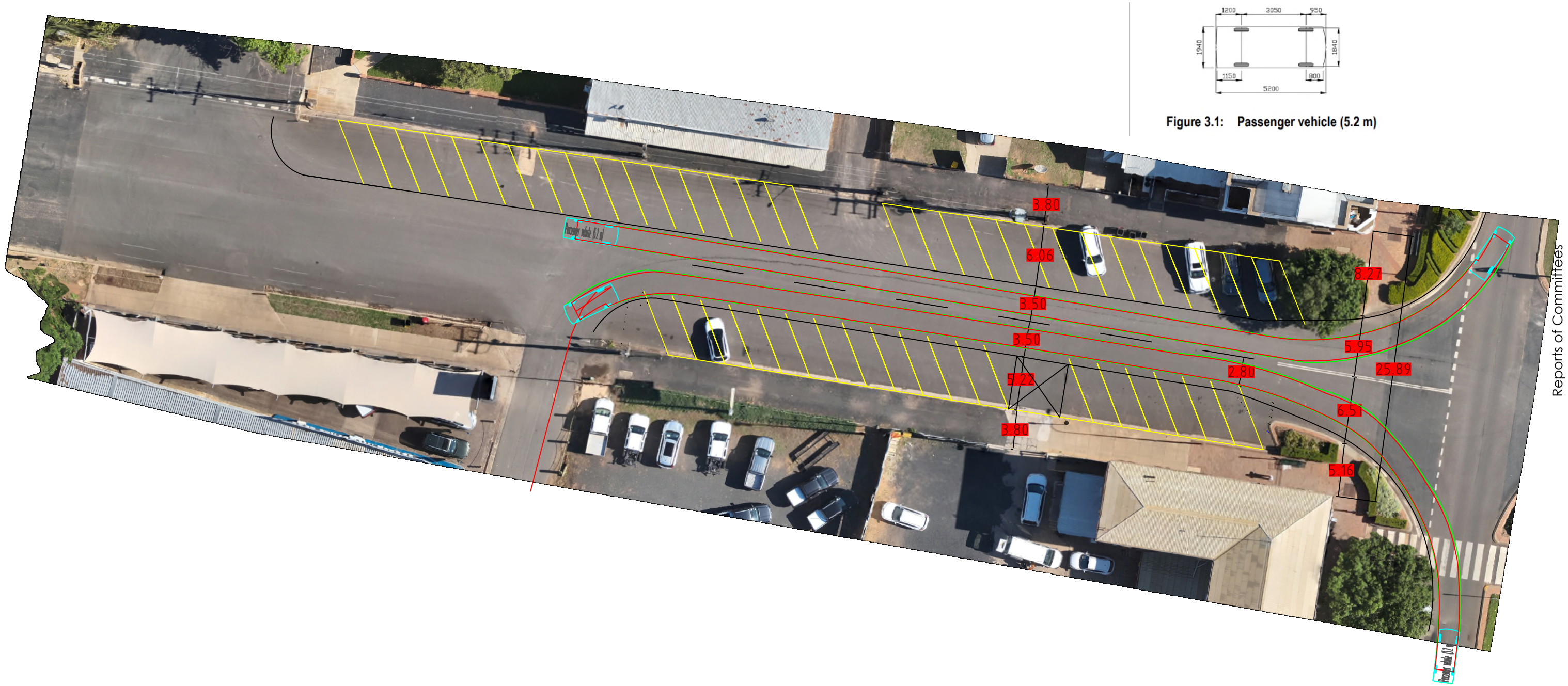

Figure 3.1: Passenger vehicle (5.2 m)

REV.	DATE	DESCRIPTION	DRAWN	CHECK	APPROVED
1	29/11/23	PARKING REVIEW	JR	JR	JR

DATE: 29/11/2023

NARROMINE SHIRE COUNCIL
T: 02 6889 9999 F: 02 6889 9944
E: admin@narromine.nsw.gov.au
A: 124 DANDALOO ST NARROMINE NSW 2821
W: www.narromine.nsw.gov.au

DO NOT SCALE
Conditions of use.
This document may only be used by Narromine Shire Councils client
(and any other person who NSC has agred can use this document)
for the purposes of which it was preparedand must not be use by any other person or for any other purpose

CLIENT: NARROMINE SHIRE COUNCIL
PROJECT: NYMAGEE STREET
TITLE: 60° PARKING LAYOUT

SIZE: A3 PAGE # 5 DRAWING # NSC-JR-LTC005

Scale: AS SHOWN REVISION # 1

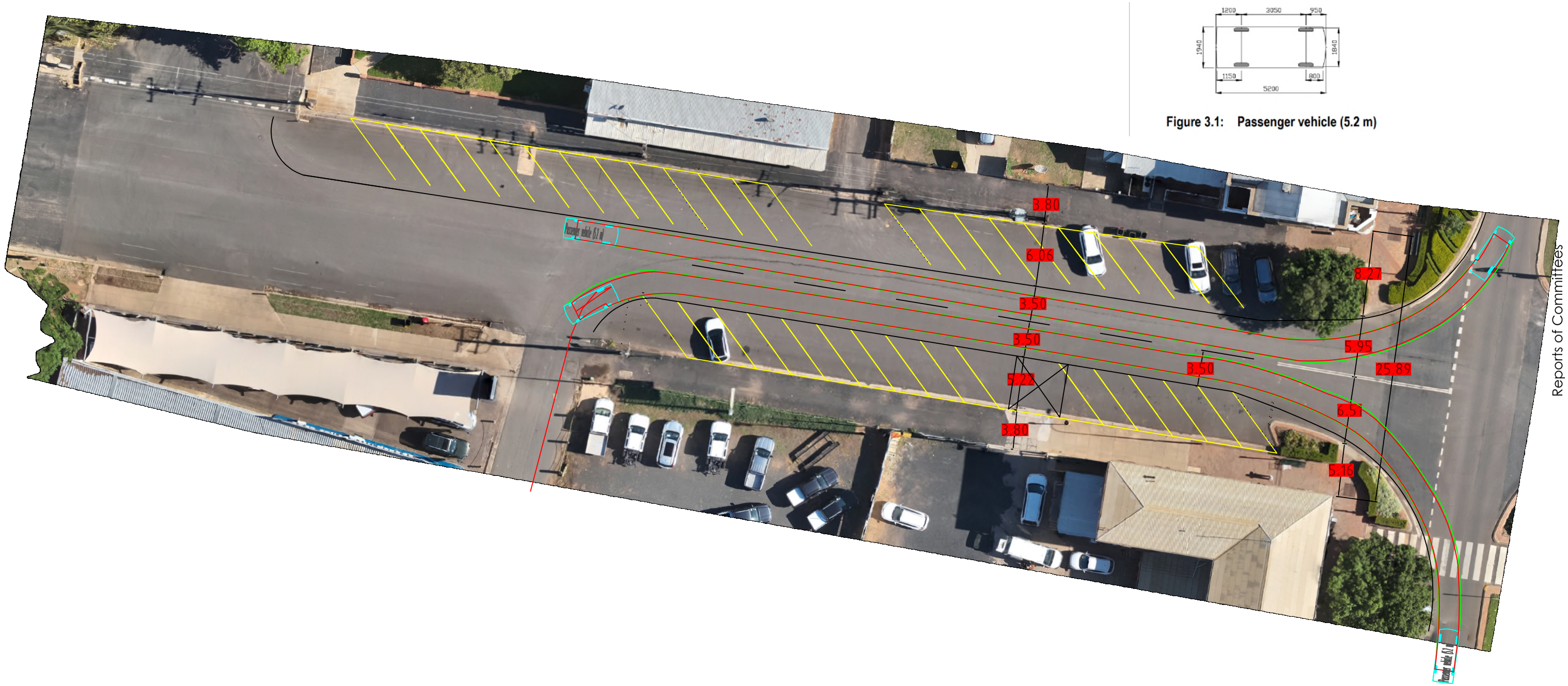

Figure 3.1: Passenger vehicle (5.2 m)

REV.	DATE	DESCRIPTION	DRAWN	CHECK	APPROVED
1	29/11/23	PARKING REVIEW	JR	JR	JR

DATE: 29/11/2023

NARROMINE SHIRE COUNCIL
T: 02 6889 9999 F: 02 6889 9944
E: admin@narromine.nsw.gov.au
A: 124 DANDALOO ST NARROMINE NSW 2821
W: www.narromine.nsw.gov.au

DO NOT SCALE
Conditions of use.
This document may only be used by Narromine Shire Councils client
(and any other person who NSC has agred can use this document)
for the purposes of which it was preparedand must not be use by any other person or for any other purpose

CLIENT: NARROMINE SHIRE COUNCIL
PROJECT: NYMAGEE STREET
TITLE: 45° PARKING LAYOUT

SIZE: A3 PAGE # 6 DRAWING # NSC-JR-LTC006

Scale: AS SHOWN REVISION # 1

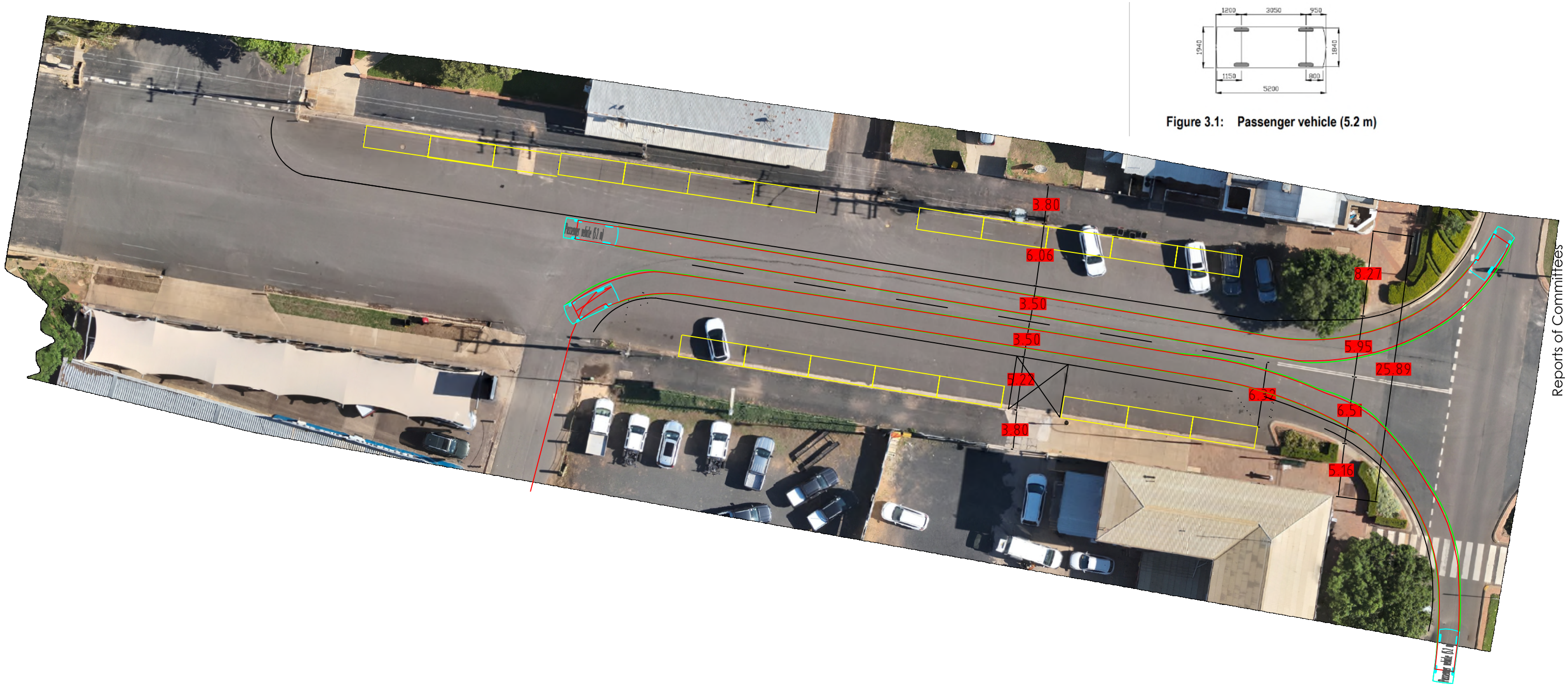

Figure 3.1: Passenger vehicle (5.2 m)

REV.	DATE	DESCRIPTION	DRAWN	CHECK	APPROVED
1	29/11/23	PARKING REVIEW	JR	JR	JR

DATE: 29/11/2023

NARROMINE SHIRE COUNCIL
T: 02 6889 9999 F: 02 6889 9944
E: admin@narromine.nsw.gov.au
A: 124 DANDALOO ST NARROMINE NSW 2821
W: www.narromine.nsw.gov.au

DO NOT SCALE
Conditions of use.
This document may only be used by Narromine Shire Councils client
(and any other person who NSC has agred can use this document)
for the purposes of which it was preparedand must not be use by any other person or for any other purpose

CLIENT: NARROMINE SHIRE COUNCIL
PROJECT: NYMAGEE STREET
TITLE: PARALLEL PARKING LAYOUT

SIZE: A3 PAGE # 7 DRAWING # NSC-JR-LTC007

Scale: AS SHOWN REVISION # 1

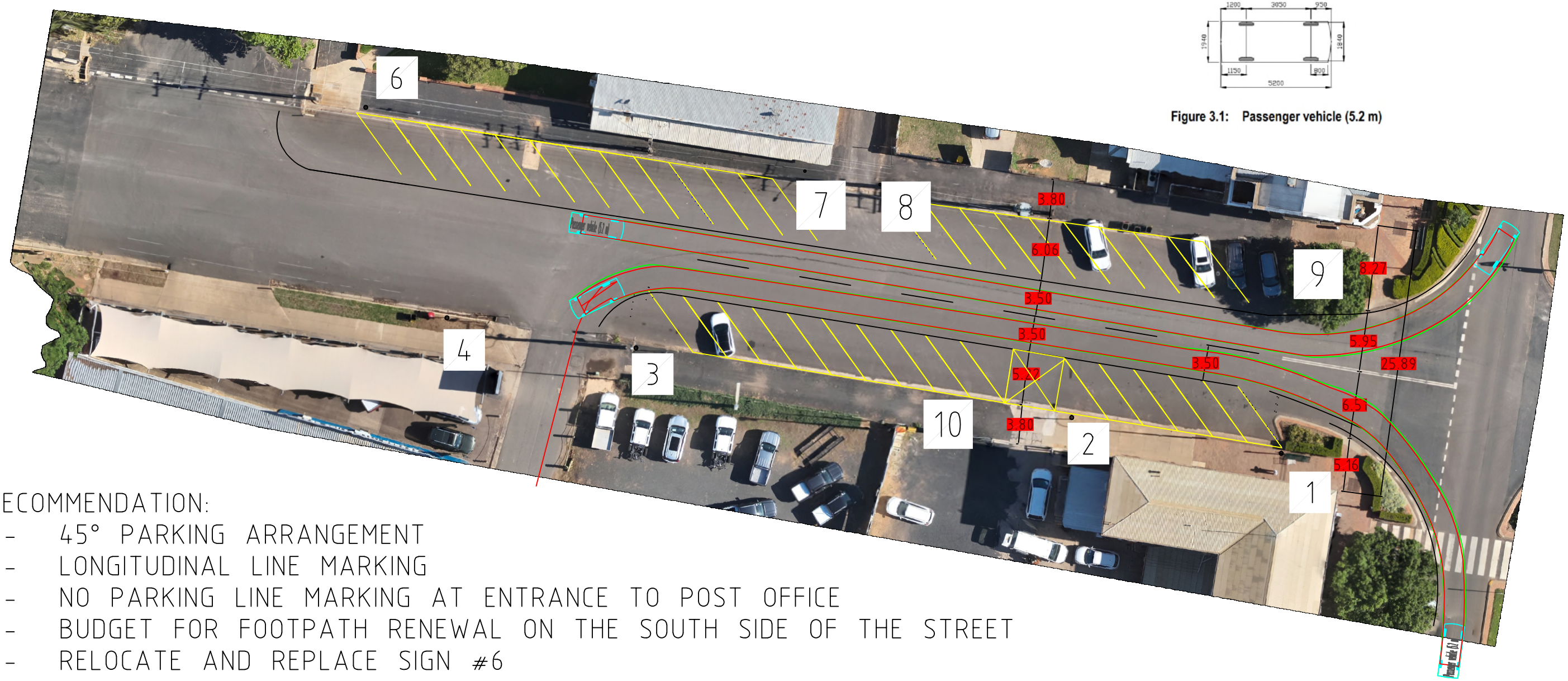

Figure 3.1: Passenger vehicle (5.2 m)

5

RECOMMENDATION:

- 45° PARKING ARRANGEMENT
- LONGITUDINAL LINE MARKING
- NO PARKING LINE MARKING AT ENTRANCE TO POST OFFICE
- BUDGET FOR FOOTPATH RENEWAL ON THE SOUTH SIDE OF THE STREET
- RELOCATE AND REPLACE SIGN #6
- INSTALL NEW SIGN #10,7,8,9,
- REPLACE ALL OTHER SIGNAGE

DIAL BEFORE YOU DIG
www.1100.com.au

REV.	DATE	DESCRIPTION	DRAWN	CHECK	APPROVED
1	29/11/23	PARKING REVIEW	JR	JR	JR

DATE: 29/11/2023

NARROMINE SHIRE COUNCIL
T: 02 6889 9999 F: 02 6889 9944
E: admin@narromine.nsw.gov.au
A: 124 DANDALOO ST NARROMINE NSW 2821
W: www.narromine.nsw.gov.au

DO NOT SCALE
Conditions of use.
This document may only be used by Narromine Shire Councils client
(and any other person who NSC has agred can use this document)
for the purposes of which it was preparedand must not be use by any other person or for any other purpose

CLIENT: NARROMINE SHIRE COUNCIL
PROJECT: NYMAGEE STREET
TITLE: RECOMMENDATION

SIZE: A3 PAGE #8 DRAWING # NSC-JR-LTC007

Scale: AS SHOWN REVISION # 1

4. GIVEWAY SIGNAGE INSTALLATION – TRANGIE

Author *Manager Engineering Services*
Responsible Officer *Manager Engineering Services*

Executive Summary

The purpose of this report is to discuss with the Local Traffic Committee request for the installation of give way signage in Trangie.

Report
Request for the installation of R1-2 (give way signage) at the location of:
- Trangie Showground Road & Croudace Street
- Trangie Cemetery Road & Mungery Street

Standards
AS1742.2: 2009 – Traffic Control Devices for General Use

Financial Impacts
The installation is to be part of the Urban Maintenance expenditure budget.

Social Impacts
There is expected to be minimal impact.

Legal Impacts
Vehicles to obey the signed traffic control.

RECOMMENDATION

That:
That the traffic committee consider and make recommendations.

Attachments:
1. Line Marking and Signage Layout

Jordan Richardson
Manager of Engineering Services

Narromine
SHIRE COUNCIL

Narromine Shire Council
PO Box 115
120 Dandaloo Street
NARROMINE NSW 2821
Telephone: 02 6889 9999
Fax: 02 6889 9998
Email: mail@narromine.nsw.gov.au

Important Notice!
This map is not a precise survey document. Accurate locations can only be determined by a survey on the ground.
This information has been prepared for Council's internal purposes and for no other purpose. No statement is made about the accuracy or suitability of the information for use for any purpose (whether the purpose has been notified to Council or not). While every care is taken to ensure the accuracy of this data, neither the Narromine Shire Council nor the SS makes any representations or warranties about its accuracy, reliability, completeness or suitability for any particular purpose and disclaims all responsibility and all liability (including without limitation, liability in negligence) for all expenses, losses, damages (including indirect or consequential damage) and costs which you might incur as a result of the data being inaccurate or incomplete in any way and for any reason.
© The State of New South Wales (Spatial Services), © Narromine Shire Council.

N W E S

Projection: GDA2020 / MGA zone 55

Date: 16/11/2023

Drawn By: Jack Powell

Proposal for give way sign on showground road

Map Scale: 1:1513 at A4

Narromine
SHIRE COUNCIL

Narromine Shire Council
PO Box 115
120 Dandaloo Street
NARROMINE NSW 2821
Telephone: 02 6889 9999
Fax: 02 6889 9998
Email: mail@narromine.nsw.gov.au

Important Notice!

This map is not a precise survey document. Accurate locations can only be determined by a survey on the ground.

This information has been prepared for Council's internal purposes and for no other purpose. No statement is made about the accuracy or suitability of the information for use for any purpose (whether the purpose has been notified to Council or not). While every care is taken to ensure the accuracy of this data, neither the Narromine Shire Council nor the SS makes any representations or warranties about its accuracy, reliability, completeness or suitability for any particular purpose and disclaims all responsibility and all liability (including without limitation, liability in negligence) for all expenses, losses, damages (including indirect or consequential damage) and costs which you might incur as a result of the data being inaccurate or incomplete in any way and for any reason.
© The State of New South Wales (Spatial Services), © Narromine Shire Council.

N
W E
S

Projection: GDA2020 / MGA zone 55

Date: 16/11/2023

Drawn By: Jack Powell

Proposal for a give way sign on Bimble box lane

Map Scale: 1:757 at A4

5. CARAVAN PARKING – O'NEIL SQUARE

Author *Manager Engineering Services*
Responsible Officer *Manager Engineering Services*

Executive Summary

The purpose of this report is to discuss with the Local Traffic Committee information regarding recommendation of caravan parking signage.

Report
Request for the installation of g7-278N(L) along Burroway Street as per spacing requirements of Australian Standards for parking within O'Neil Square.

Standards
AS1742.2 – Traffic Control Devices for General Use
AS1742.6 – Service and Tourist Signs for Motorists

Financial Impacts
The installation is to be part of the Urban Maintenance expenditure budget.

Social Impacts
There is expected to be minimal impact.

Legal Impacts
Vehicles to obey the signed guidance.

RECOMMENDATION

Recommendation:
That:
That the traffic committee consider and make recommendations.

Attachments:
1. Caravan Parking (Left Chevron) sign design plan

Jordan Richardson
Manager of Engineering Services

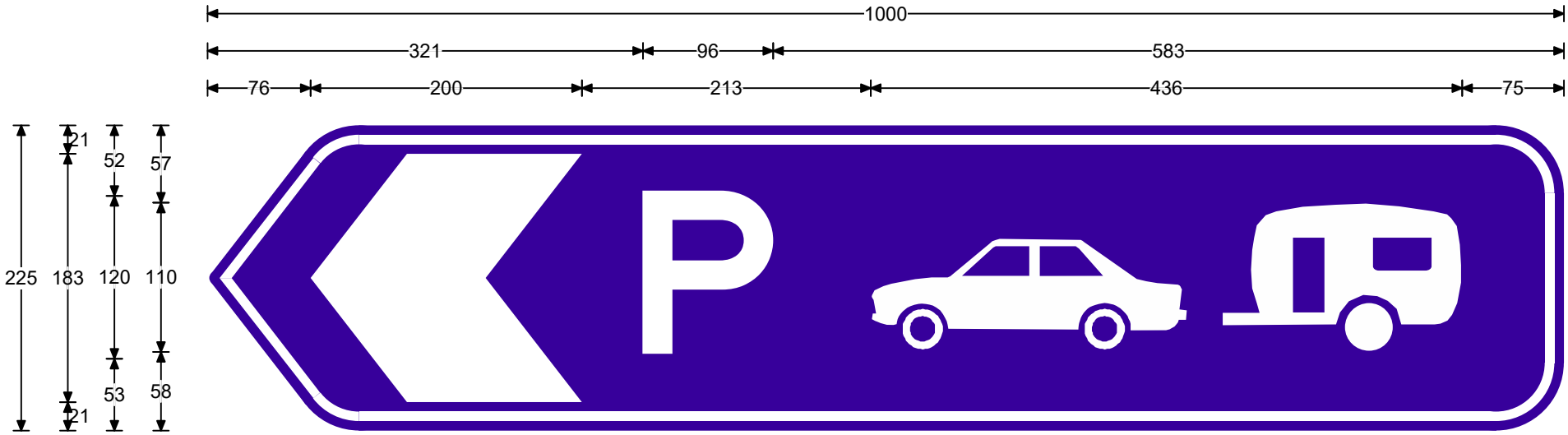

Legend	Font Type	Font Size
P	FHWA Series E2000EX	120

Specifications:
Aluminium Sign
Cl.400 White refl lgd(AS1906.1)
Cl.400 Blue refl grd(AS1906.1)

Size:	225 x 1000	Date:	21/4/22
Area:	0.23 sq.m	Scale:	1:4.6
Border:	7 x 7	Drawn:	daviesm
Cnr Rad:	50	Checked:	
Patch CR:	NA	File:	g7-278n_l
		Path:	H:\Signs\TTT\DRAWINGS\GUIDE\TrasiCAD

Prepared using TraSiCAD
Product of QMR

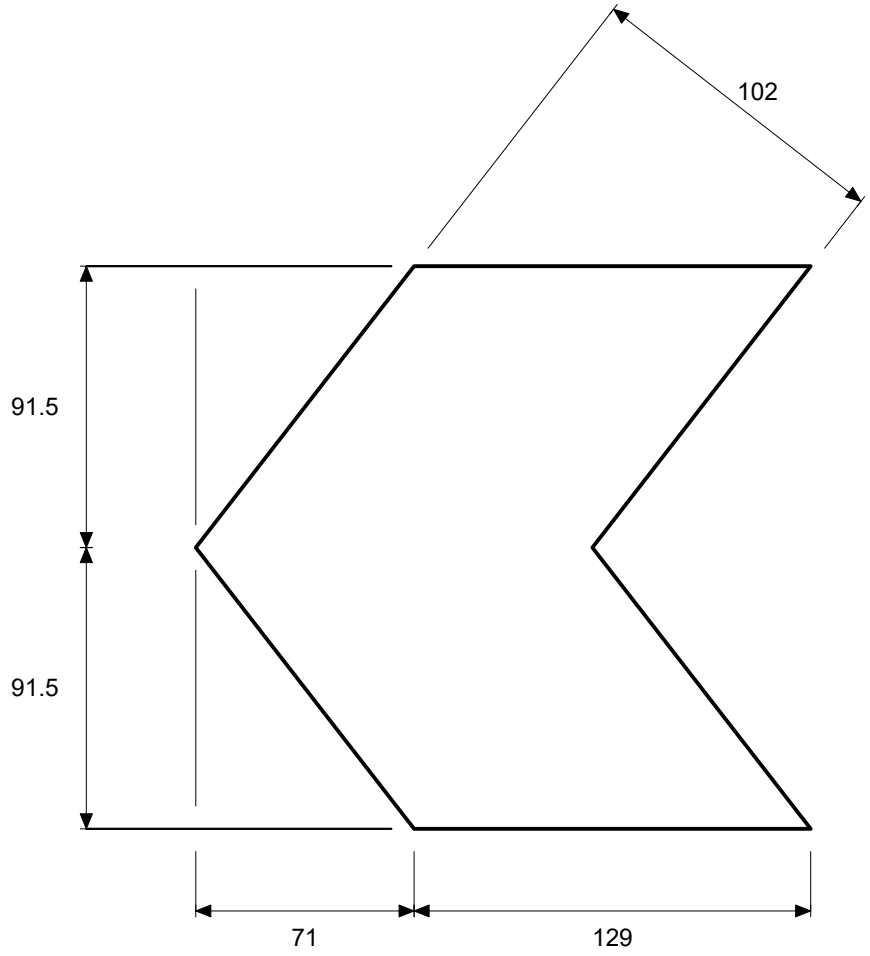

Details of Sign Face Symbols

Size:	225 x 1000	Date:	21/4/22
Area:	0.23 sq.m		
Border:	7 x 7	Drawn:	daviesm
Cnr Rad:	50	Checked:	
		File:	g7-278n_l
		Path:	H:\Signs\TTT\DRAWINGS\GUIDE\TrasiCAD

Prepared using TraSiCAD
Product of QMR

Back to Report

MINUTES OF THE NARROMINE AUSTRALIA DAY COMMITTEE MEETING HELD IN NARROMINE SHIRE COUNCIL CHAMBERS ON WEDNESDAY 17 JANUARY 2024

PRESENT: Cr Les Lambert (Chair), David Taylor, Ros Reid, Bob Davis, Vikki Drew, Viv Halbisch and Alison Attwater (Minute Secretary)

1. WELCOME

The Chair welcomed those present and declared the meeting open at 4.15 pm.

2. APOLOGIES

Nil

3. DECLARATION/CONFLICT OF INTEREST

Nil

4. CONFIRMATION OF MINUTES OF PREVIOUS MEETING

RECOMMENDED Ros Reid/ Viv Halbisch that the Minutes of the previous meeting of the Narromine Australia Day Committee held on 16 January 2023 be adopted as a full and accurate record of proceedings of that meeting.

5. BUSINESS ARISING FROM THE MINUTES

Nil

6. GENERAL BUSINESS

- Council to provide all consumable food except jam and honey, which the Generocity Church will provide.
- All BBQs, cooking utensils, tables, and urns to cook and serve food will be provided by Generocity Church and the Narromine Lions Club.
- Wet weather venue is the Narromine Sports and Fitness Centre
- 7.00 am arrival for the committee breakfast to start at 8.00 am followed by formalities.
- Watermelon eating competition to be facilitated by Cr Casey Forrester. Age groups are under 6, 7-12, 13-16 and 17 plus.
- 100 Club tickets to be $5.00 per ticket. Ros Reid to facilitate the 100 Club and prizes are $150 for first prize, $80 for second prize, and $20 for third prize.

7. NEXT MEETING

The next meeting of the Narromine Australia Day Committee will be held on Wednesday, 21 February 2024 in Council's Chambers commencing at 4.00 pm.

There being no further business, the meeting closed at 4.55 pm.

The Minutes (pages 2) were confirmed at a meeting held on the day of 2024 and are a full and accurate record of the meeting held on the 17 January 2024.

CHAIR

Back to Report